TE2006

10/100 BASE-T ETHERNET
ISOLATION TRANSFORMER

Features:

- IC grade transfer molded package withstands 235°C peak temperature profile.
- Compliant with IEEE 802.3u and ANSI X3.263 standards.
- UL 94V0 material.
- Operating Temperature: 0°C to +70°C
- Storage Temperature: 0°C to +125°C

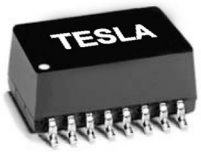

Electrical Specifications @25°C:

1. Insertion loss:

   0.3MHz to 100MHz: -1.1dB Max.

2. Return loss:

   @30MHz: -18dB Min.

   @60MHz: -14dB Min.

   @80MHz: -12dB Min.

3. Crosstalk:

   @30MHz: -45dB Min.

   @60MHz: -40dB Min.

   @100MHz: -35dB Min.

4. Differential to Common Mode Rejection:

   @30MHz: -40dB Min.

   @50MHz: -35dB Min.

   @100MHz: -30dB Min.

5. Turn Ratio:

   1CT:1CT ±5%

6. Leakage Inductance:

   @100kHz;0.1Vrms: 0.5uH Max.

7. Interwinding Capacitance:

   @100kHz;0.1Vrms: 56pF Max.

8. Inductance:

   @100kHz; 0.1Vrms; 8mA DC Biased: 350uH Min.

9. DCR (Chip side): 0.7Ω Max.

   DCR (Cable side): 1.1Ω Max.

10. Isolation:

    1500Vrms; 0.5mA; 1Sec.

Mechanical

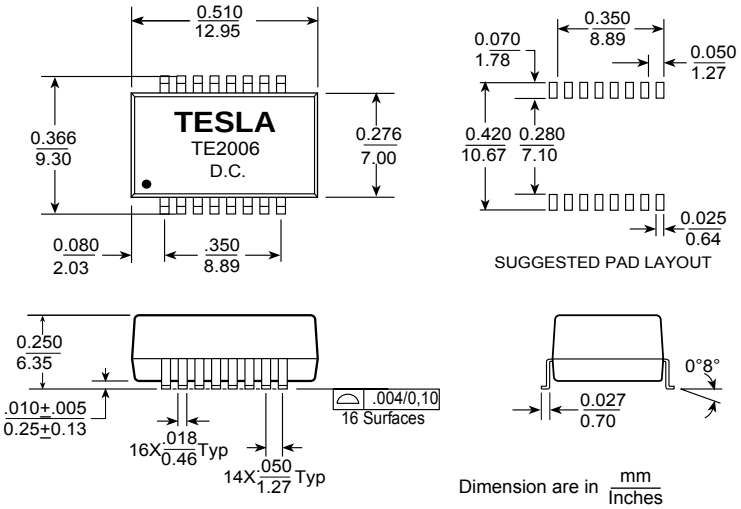

Schematic

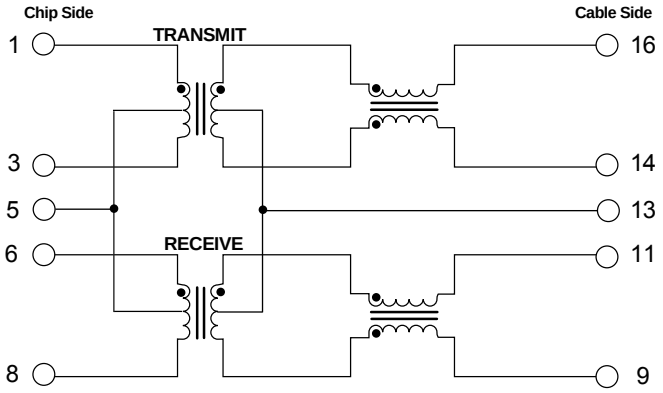

- Product Weight: 1.2 grams
- Moisture Sensitivity level: 3
- Ordering Information:
  TE2006 -Tube Packaging (40pcs/tube)
  TE2006TR - Tape & Reel (600pcs/13" reel)

TESLA MAGNETICS INC.
3240 SCOTT BLVD
SANTA CLARA, CA 95054

TEL: (408) 207-0407
FAX: (408) 980-1555
www.teslamagnetics.com